Data Sheet

Article number: 335012001254245D2
Description: Safety coupling BKK 200 multiposition
Length 125 mm, bore 42/45 mm, TKn max 200 NM

Measures

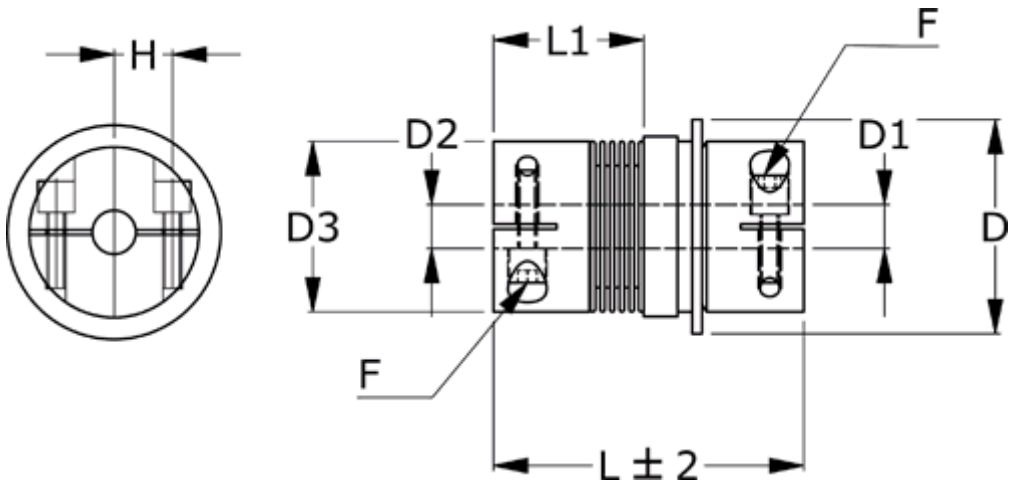

D = 109	Nom. torque NM (Tkn) = 200NM overload torque range 2
D1 = 45	Position engagement = C = Synchronous
D2 = 42	s = 2.0
D3 = 90.0	
F = M12	
H = 31.0	
L = 125	
L1 = 63.0	

Product drawings and brochures of any kind may contain errors for which Brd. Klee A/S cannot be liable.